Building instructions - dravings

ion JP MODELS

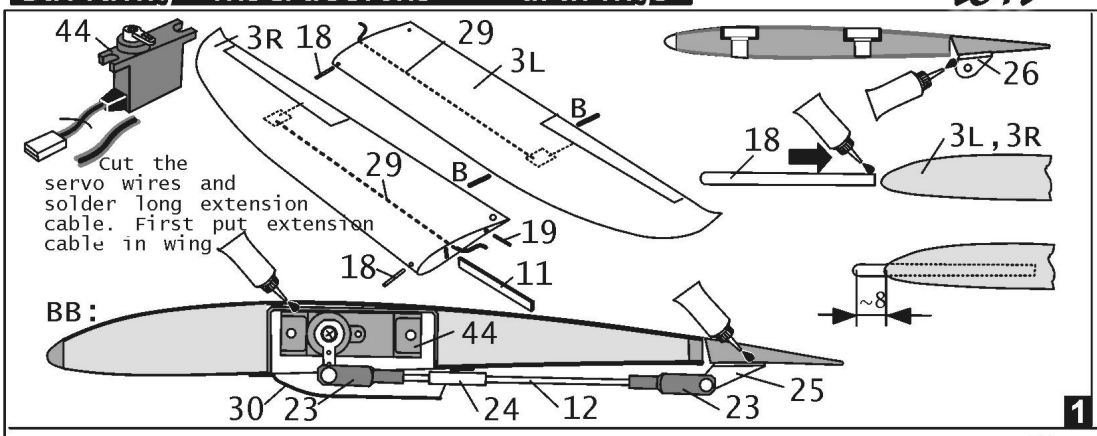

Reccommended trimm
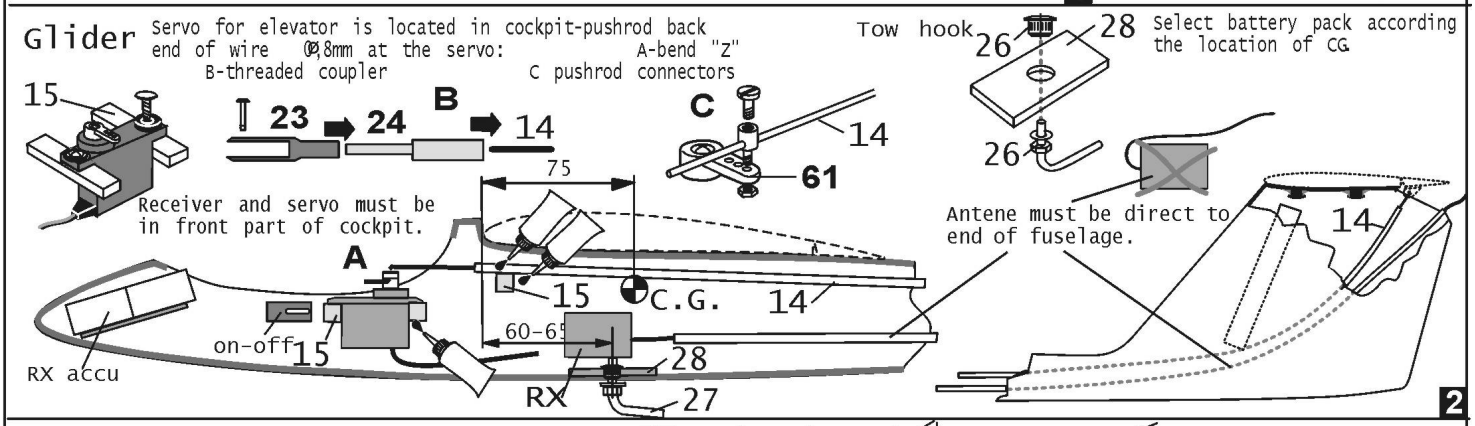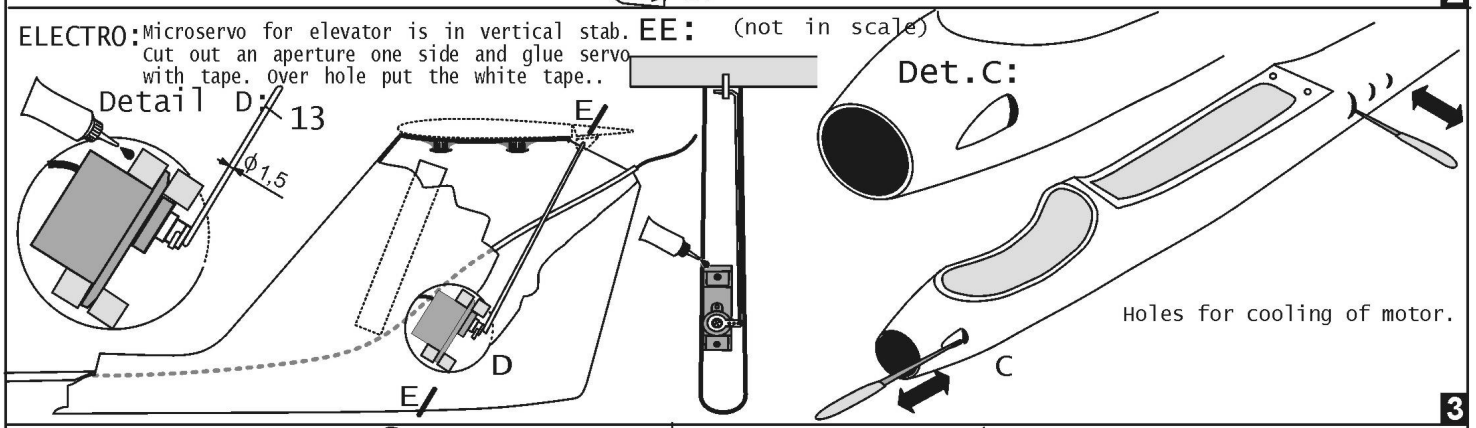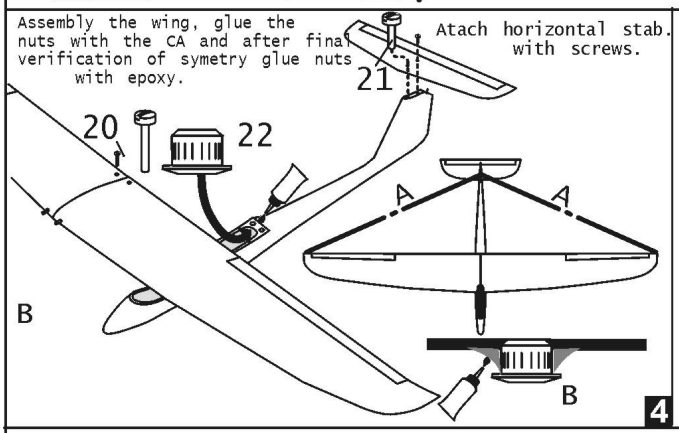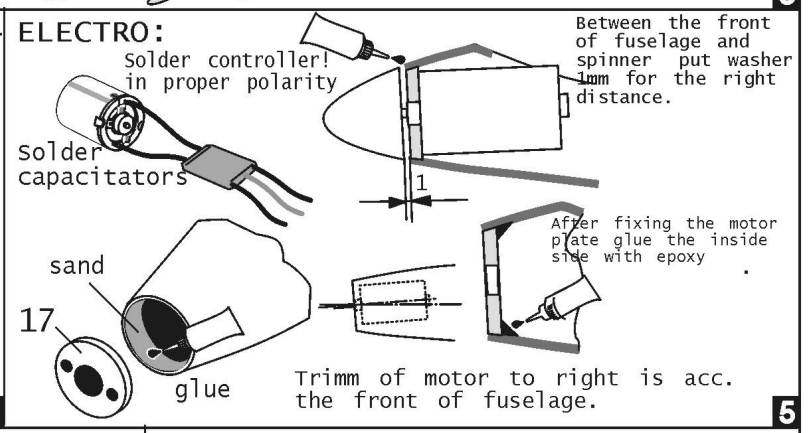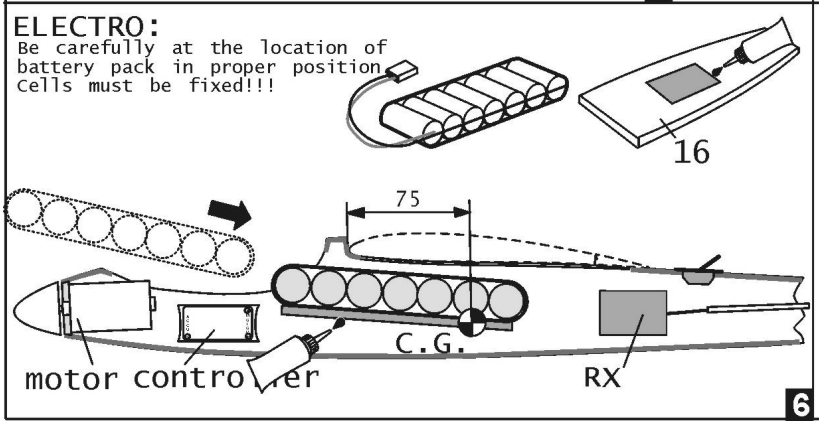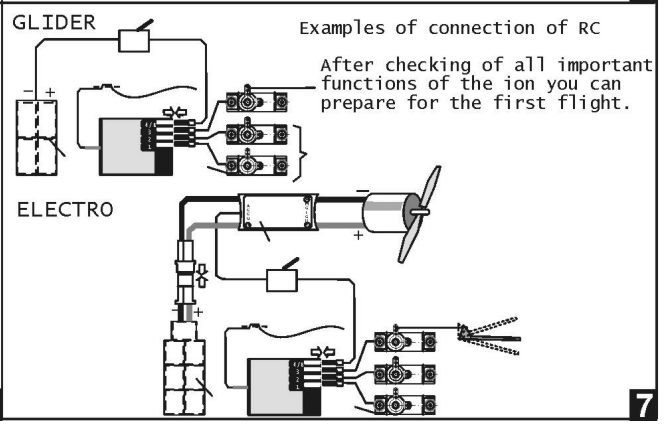
Reccommended trimm	mm on the trailing edge
elevator ↑	5
elevator ↓	4
ailerons ↑	12
ailerons ↓	8
flaps (ailerons) ↑	18